NATIONAL CRANE®
by Manitowoc

NBT60XL
Product Guide

ASME B30.5 • Imperial 85%

Features

- Nominal Rating: 54,4 t (60 USt)
- 46 m (151 ft) five-section, full-power boom
- 11 m (36 ft) lattice, offsettable jib
- NTC Performance Package (NTC60XL)
- Hydraulically tilting operator cab with heated seat and bluetooth/AM/FM stereo and speakers
- Hydraulically removable counterweight system with multiple configurations up to 16,000 lbs

NATIONAL CRANE NBT60XL

Best of both worlds: The NBT60XL combines the maneuverability and comfort of a boom truck with the performance of a truck crane. With 16,000 lbs of hydraulically removable counterweight, this crane can meet the needs of any application, every day!

Features

> Five-section boom

The NBT60XL is equipped with a 46 m (151 ft) boom. An optional 11 m (36 ft) fixed length offsettable jib or a 7,9 m to 13,7 m (26 ft to 45 ft) two-section offsettable manual extension is available. Increase the efficiency of every job and compete for more jobs daily with more reach and more available working envelop than other boom truck or truck cranes with shorter booms.

> Extreme versatility and strength

Whether you need a boom truck or truck crane for the job, the NBT60XL will meet any application. Available with up to 16,000 lbs of removable counterweight for even more capacity while maintaining flexibility for any roading condition.

> Operator-focused design

The NBT60XL is designed specifically with the operator in mind, with a to 20˚ tilting cab, a graphical RCL with integrated control system, optional sideview and hoist-view cameras, standard dual axis electronic joysticks and lighter polymeric outrigger floats for easy setup. The hydraulically removable counterweight slabs feature built in sling guides for quick, easy mobility for moving on and off the machine or around the yard.

> NTC Performance Package

National Crane truck crane features the easy roadability of a boom truck. The NTC Performance Package provides key features such as four-position outriggers (100%, 75%, 50% and fully retracted charts), integrated two-camera system for hoist-view and rearviews, and built-in wireless windspeed indicator. NTC Performance Package machines come with special NTC60XL model designations.

> Options and Customizations

The NBT60XL can be enhanced with these factory options and Lift Solutions to tailor to your needs. See the Truck Mod Customization Catalog for additional turn-key options.

- Factory-installed toolbox, pintle hitches, outrigger cribbing mats
- Radio remote controls
- Wind speed indicator
- Hoist-view and sideview camera system

Lift Solutions™

Truck Mod Center™

Jobsite benefits

> Long reach and solid crane foundation.

- 49,1 m (161 ft) working height without needing to swing a jib. If additional reach is needed, two jib options are available in the 11 m (36 ft) lattice offsettable jib and the manual two-section 7,9 m to 13,7 m (26 ft to 45 ft) telescoping jib to a working height over 61 m (200 ft).
- Four outrigger positions, including a unique 6,1 m (20 ft) span for tight operating spaces (similar to 60 USt truck cranes)
- Rock-solid operating performance with less carrier flex and twist than an average boom truck
- Up to 16,000 lbs of hydraulically removable counterweight with multiple configurations to achieve the best roading package for your application.

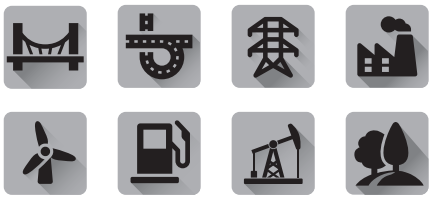

> Simpler, smoother and smarter operation.

- Graphical RCL for easy setup
- Class-leading features, such as adjustable joystick speeds, onboard diagnostics and service capabilities without the need for a laptop
- Offsettable jib options

> Enhanced comfort, access and egress, and setup.

- Comfort of a commercial truck chassis from leading manufacturers
- 20° hydraulically tilting, ergonomic operator cab with heated seat and bluetooth/AM/FM stereo and speakers
- Strong aluminum decking with multiple ladders for easy access
- Lighter polymeric operator floats that are easy to use and less prone to theft on the job
- Easy-access hydraulics for maintenance and increased serviceability
- Hoist access platform for easy access and maintenance of both the main and auxiliary hoists

Manitowoc Crane Care™

Manitowoc Crane Care when you need it.
The assurance of the world's most advanced crane service and support to get you back to work fast.

Manitowoc Finance™

Manitowoc Finance helps you get right to work generating profits for your business.
Financial tools that help you capitalize on opportunity with solutions that fit your needs.

Contents

Dimensions 5

Counterweight 7

Mounting configurations 8

Working range diagram 10

Main Boom Load Chart 11

Lattice Jib Load Chart 13

Specifications 15

Symbols glossary 19

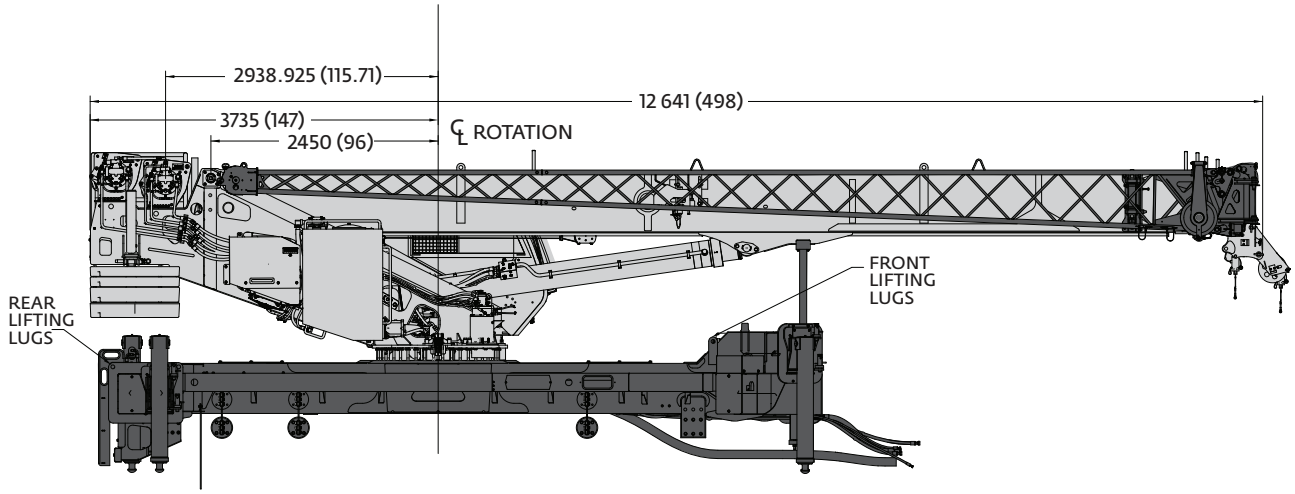

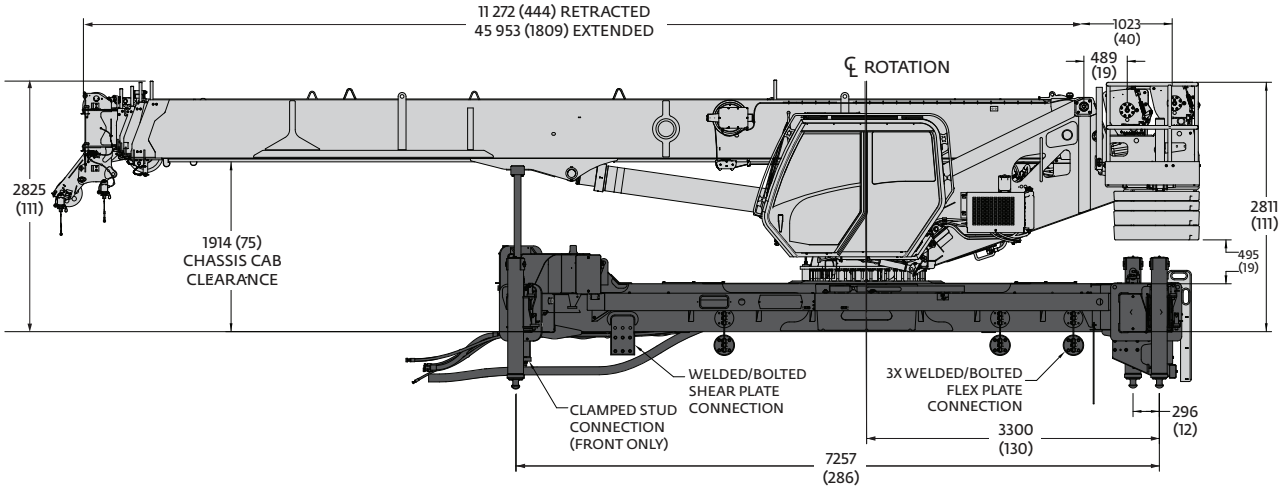

Dimensions are in mm (in) unless otherwise specified

Dimensions

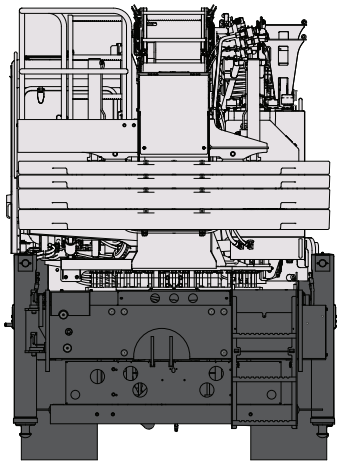

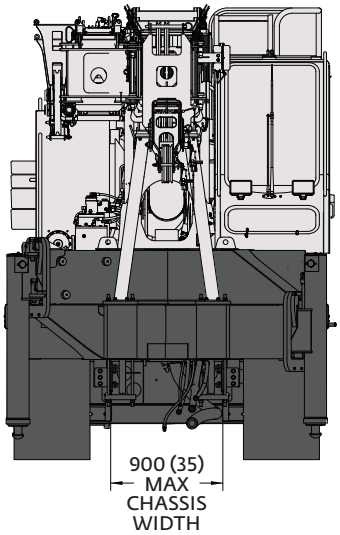

Weight and CG Estimates
Configuration
NBT60XL/NTC60XL
Horizontal CG mm (in)
-48 (-1.9)
Weight w/ Fluids kg (lb)
23 310 (62,453)
CWT Pinned kg (lb)
5971 (16,000)

Note: 75% span available ONLY with the NTC Performance Package.

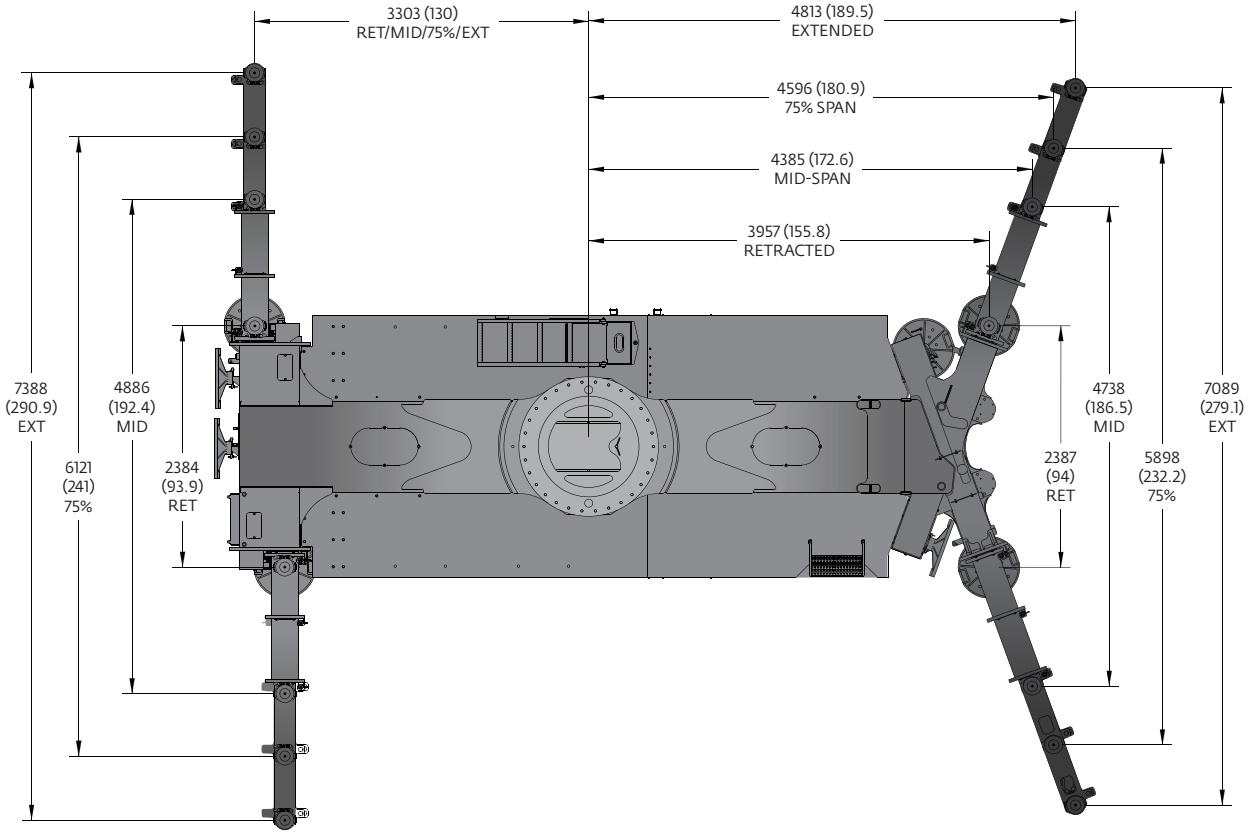

Dimensions are in mm (in) unless otherwise specified

Counterweight configurations

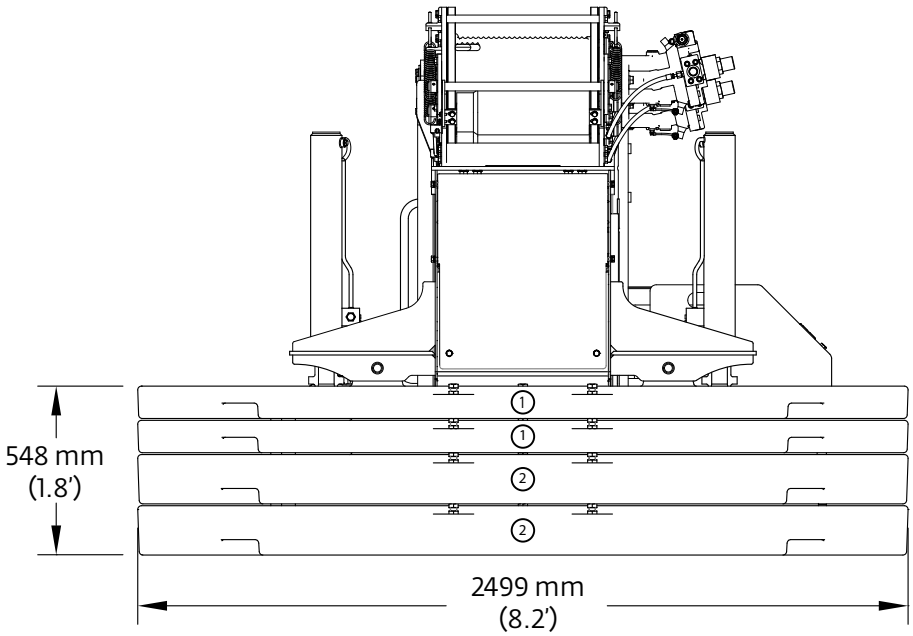

1. 1361 kg (3000 lb) pinned or stackable
2. 2268 kg (5000 lb) pinned or stackable

Load chart configurations		
	1	2
0		
1361 kg (3000 lb)	X	
2268 kg (5000 lb)		X
2721 kg (6000 lb)	2X	
3629 kg (8000 lb)	X	X
4536 kg (10000 lb)		2X
4989 kg (11000 lb)	2X	X
5897 kg (13000 lb)	X	2X
7257 kg (16000 lb)	2X	2X

Mounting configurations

The configurations are based on the NBT60XL with an 85% stability factor. The complete unit must be installed in accordance with factory requirements and a test performed to determine actual stability and counterweight requirements since individual truck chassis vary.

NBT60XL Recommended Minimum Truck Specification

Working area: 360°

Gross Axle Weight Rating Front: 9072 kg (20,000 lb)

Gross Axle Weight Rating Rear: 29,937 kg (66,000 lb)

Wheelbase: 711 cm (280 in)

Cab to Axle/Trunnion (CA/CT): 482 cm (190 in)

Frame Strength: 7885 MPa (110,000 PSI)

Frame Section Modulus (SM) Front Axle to End of Frame: 327 cm3 (20 in3)

Stability Weight Front: 4445 kg (9,800 lb)

Stability Weight Rear: 5035 kg (11,100 lb)

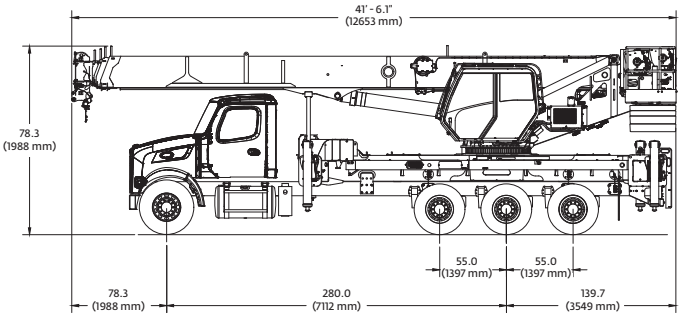

Note: Estimated axle scale weights prior to installation of crane assembly for 85% stability. This configuration does not meet Federal Bridge Law. Some counterweights must be removed from the machine for transportation.

NBT60XL Recommended Truck Specification Full Counterweight Carrying Capability

Working area: 360°

Gross Axle Weight Rating Front: 9072 kg (20,000 lb)

Gross Axle Weight Rating Rear: 35,380 kg (78,000 lb)

Gross Vehicle Weight Rating: 44,452 kg (98,000 lb)

Wheelbase: 711 cm (280 in)

Cab to Axle/Trunnion (CA/CT): 482 cm (190 in)

Frame Strength: 7885 MPa (110,000 PSI)

Frame Section Modulus (SM) Front Axle to End of Frame: 327 cm3 (20 in3)

Stability Weight Front: 4898 kg (10,800 lb)

Stability Weight Rear: 5533 kg (12,200 lb)

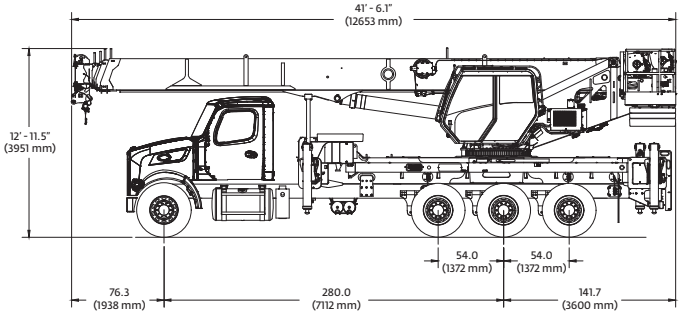

Note: Estimated axle scale weights prior to installation of crane assembly for 85% stability. This configuration does not meet Federal Bridge Law. This configuration can carry the full 16,000 lbs. of counterweight during transportation (subject to roading restrictions).

Minimum Truck Requirements

Many factors must be considered in the selection of the proper truck for an NBT60XL crane. Items which must be considered are:

1. Axle Rating. Axle ratings are determined by the axles, tires, rims, springs, brakes, steering and frame strength of the truck. If any one of these components is below the required rating, the gross axle rating is reduced to its weakest component value.

2. Wheelbase (WB), Cab-to-Trunnion (CT) and Bare Chassis Weight. The wheelbase, CT and chassis weights shown are required so the basic NBT60XL can be legally driven in most states and meet stability requirements. The dimensions given assume the sub-base is installed properly behind the truck cab. If exhaust stacks, transmission protrusions, etc., do not allow a close installation to the cab, the WB and CT dimensions must be increased. Refer to the Mounting Configuration pages for additional information.

3. Truck Frame. Try to select a truck frame that will minimize or eliminate frame reinforcement or extension of the after frame (AF). Many frames are available that have the necessary AF section modulus (SM) and resistance to bending moment (RBM) so that reinforcing is not required. The frame under the cab through the front suspension must have the minimum SM and RBM because reinforcing through the front suspension is often difficult because of engine, radiator mounts and steering mechanics. See Truck Requirements and Frame Strength pages for the necessary SM and RBM values. Integral extended front frame rails are required for front center stabilizer installation.

4. Additional Equipment. In addition to the axle ratings, wheelbase, cab-to-axle requirements and frame, it is recommended that the truck be equipped with electronic engine control, increased cooling and a transmission with a PTO opening available with an extra heavy-duty PTO. A conventional cab truck should be used for standard crane mounts.

5. Neutral Start Switch. The chassis must be equipped with a switch that prevents operation of the engine starter when the transmission is in gear.

Notes:

- Gross Vehicle Weight Rating (GVWR) is dependent on all components of the vehicle (axles, tires, springs, frame, etc.) meeting manufacturers' recommendations; always specify GVWR when purchasing trucks.
- Diesel engines require a variable speed governor for smooth crane operation; electronic fuel injection requires EET engine remote throttle
- All mounting data is based on a National Crane NBT60XL with an 85% stability factor.
- The complete unit must be installed in accordance with factory requirements, and a test performed to determine actual stability and counterweight requirements per SAE J765; contact the factory for details.

Working range

46,0 m (151 ft) | 11 m (36 ft) | 100% | 360°

Boom deflection not shown

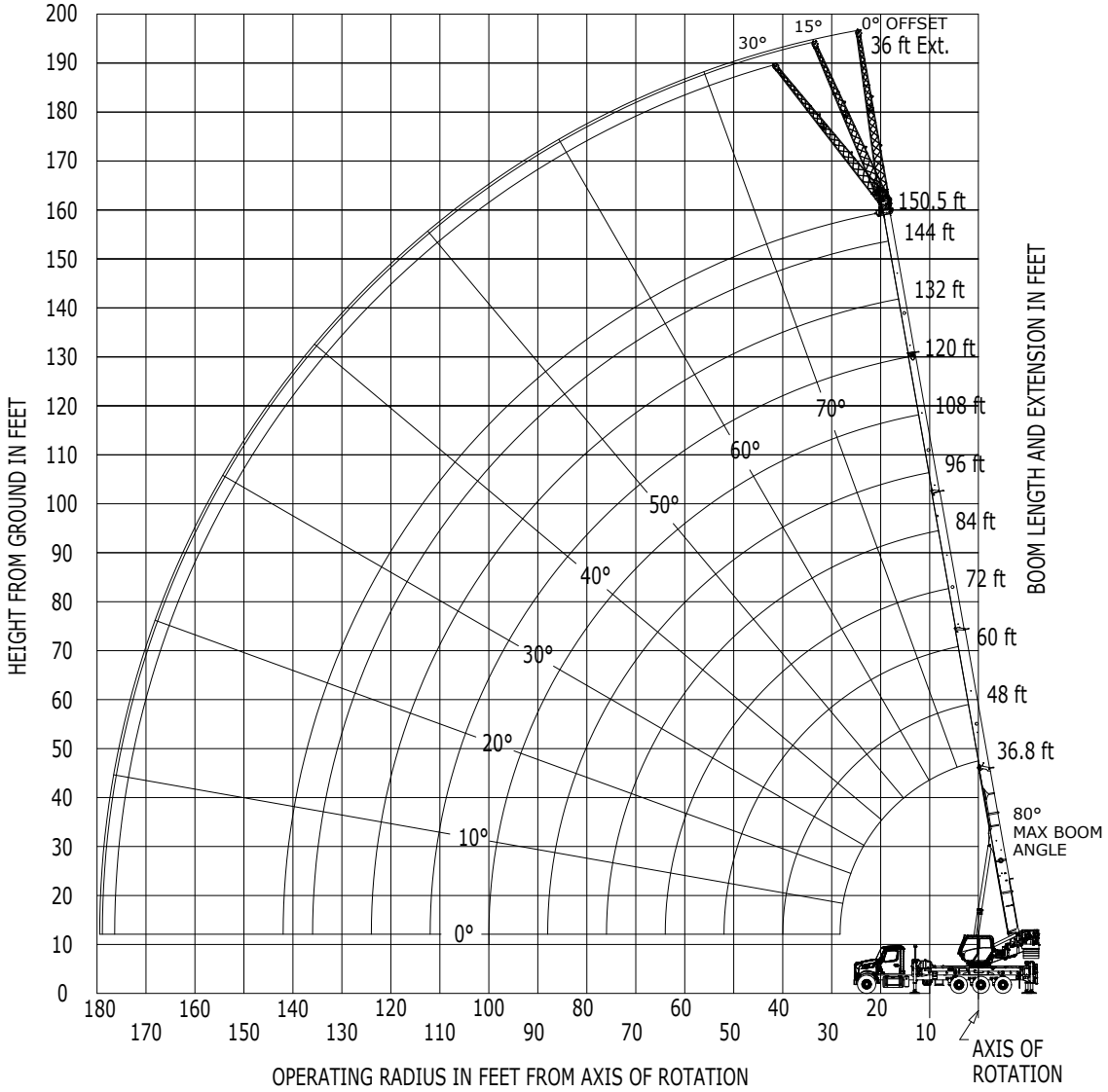

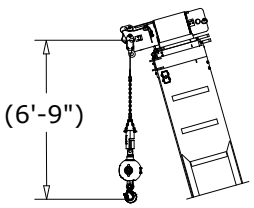

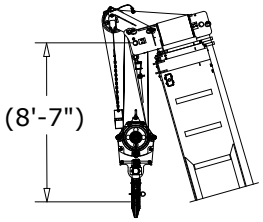

DIMENSIONS ARE FOR LARGEST FURNISHED HOOK BLOCK & HEADACHE BALL, WITH ANTI-TWO BLOCK ACTIVATED.

** This drawing shows the physical reach of the machine. Always refer to load chart to see which portions of this diagram are valid for the specific machine configuration and where the loads are structurally or stability limited.*

NBT60XL/NTC60XL

11 m – 46 m (36 ft – 151 ft)

7257 kg (16,000 lbs)

100%

360°

Pounds

Radius in Feet	Main Boom Length in Feet										
	36.3	48	60	72	84	96	108	120	132	144	151
6	120,000 (74.1)	49,600 (78.5)									
8	102,000 (70.9)	49,600 (76.2)	49,600 (79.5)								
10	89,500 (67.6)	49,600 (73.9)	49,600 (77.7)								
12	79,250 (63.8)	49,600 (71.5)	49,600 (75.9)	49,600 (78.7)							
15	67,300 (57.8)	49,600 (67.8)	49,600 (73.1)	46,700 (76.5)	39,700 (78.9)						
20	53,150 (46.4)	49,600 (60.5)	49,600 (68.3)	42,050 (72.7)	36,100 (75.7)	30,250 (77.8)	23,550 (79.7)				
25	37,450 (30)	44,200 (52.4)	44,750 (62.7)	38,150 (68.7)	32,950 (72.5)	27,400 (75.1)	21,150 (77.3)	18,600 (79)			
30		37,000 (43.1)	37,600 (56.6)	34,950 (64.3)	30,250 (69.1)	24,700 (72.3)	19,100 (74.9)	16,950 (76.8)	14,500 (78.4)	11,300 (79.7)	
35		27,400 (29.8)	30,600 (49.8)	31,100 (59.3)	27,950 (65.5)	22,350 (69.4)	17,250 (72.4)	15,450 (74.6)	13,900 (76.5)	11,300 (78)	10,050 (78.8)
40			25,400 (42.1)	25,850 (53.9)	25,950 (61.2)	20,300 (66.4)	15,700 (69.8)	14,150 (72.4)	12,800 (74.5)	11,300 (76.2)	10,050 (77.1)
45			21,350 (31.5)	21,800 (48.1)	22,100 (56.8)	18,600 (62.8)	14,350 (67.1)	12,950 (70.1)	11,750 (72.5)	10,700 (74.4)	10,050 (75.4)
50			13,100 (15.9)	18,650 (41.6)	18,950 (52.1)	17,100 (59)	13,200 (64)	11,900 (67.8)	10,850 (70.4)	9,930 (72.6)	9,470 (73.6)
55				15,950 (32.7)	16,100 (47)	15,800 (55)	12,150 (60.7)	11,000 (65)	10,000 (68.3)	9,200 (70.7)	8,780 (71.8)
60				12,000 (21)	13,700 (41.3)	13,850 (50.7)	11,250 (57.2)	10,150 (62.1)	9,300 (65.9)	8,540 (68.8)	8,160 (70)
65					11,800 (33.6)	11,900 (46.2)	10,450 (53.6)	9,460 (59.1)	8,640 (63.3)	7,940 (66.7)	7,590 (68.1)
70					10,250 (24.1)	10,400 (41.2)	9,760 (49.7)	8,800 (55.9)	8,030 (60.6)	7,380 (64.3)	7,070 (66)
75					5,400 (8.3)	9,060 (34.3)	9,120 (45.6)	8,210 (52.6)	7,460 (57.7)	6,840 (61.8)	6,550 (63.7)
80						7,920 (26.3)	7,980 (41.1)	7,580 (49.1)	6,840 (54.8)	6,260 (59.3)	5,980 (61.3)
85						5,950 (15.3)	6,990 (35)	6,990 (45.3)	6,290 (51.7)	5,720 (56.7)	5,460 (58.8)
90							6,140 (27.9)	6,190 (41.2)	5,780 (48.5)	5,240 (53.9)	4,990 (56.3)
95							5,390 (19)	5,430 (35.6)	5,310 (45)	4,790 (51.1)	4,550 (53.7)
100								4,760 (29.3)	4,800 (41.2)	4,380 (48)	4,150 (50.9)
105								4,170 (21.7)	4,200 (36.1)	4,000 (44.8)	3,730 (48)
110								2,440 (10.7)	3,660 (30.3)	3,640 (41.3)	3,340 (45)
115									3,190 (23.7)	3,190 (36.5)	2,980 (41.6)
120									2,590 (15.1)	2,750 (31.3)	2,650 (37)
125										2,360 (25.4)	2,310 (32.1)
130										2,000 (18.1)	1,950 (26.5)
135											1,620 (19.9)
140											720 (10.5)

NOTE: ( ) Boom angles are in degrees.

THIS CHART IS ONLY A GUIDE AND SHOULD NOT BE USED TO OPERATE THE CRANE.
The individual crane's load chart, operating instructions and other instructional plates must be read and understood prior to operating the crane.

Load charts

NBT60XL/NTC60XL

11 m – 46 m
(36 ft – 151 ft)

7257 kg
(16,000 lbs)

100%

Over rear

Pounds

Radius in Feet	Main Boom Length in Feet										
	36.3	48	60	72	84	96	108	120	132	144	151
6	120,000 (74.1)	49,600 (78.5)									
8	107,000 (70.9)	49,600 (76.2)	49,600 (79.5)								
10	96,450 (67.6)	49,600 (73.9)	49,600 (77.7)								
12	86,550 (63.8)	49,600 (71.5)	49,600 (75.9)	49,600 (78.7)							
15	74,700 (57.8)	49,600 (67.8)	49,600 (73.1)	46,700 (76.5)	39,700 (78.9)						
20	60,300 (46.4)	49,600 (60.5)	49,600 (68.3)	42,050 (72.7)	36,100 (75.7)	30,250 (77.8)	23,550 (79.7)				
25	37,450 (30)	49,600 (52.4)	45,850 (62.7)	38,150 (68.7)	32,950 (72.5)	27,400 (75.1)	21,150 (77.3)	18,600 (79)			
30		39,550 (43.1)	40,100 (56.6)	34,950 (64.3)	30,250 (69.1)	24,700 (72.3)	19,100 (74.9)	16,950 (76.8)	14,500 (78.4)	11,300 (79.7)	
35		27,400 (29.8)	33,000 (49.8)	32,250 (59.3)	27,950 (65.5)	22,350 (69.4)	17,250 (72.4)	15,450 (74.6)	13,900 (76.5)	11,300 (78)	10,050 (78.8)
40			27,700 (42.1)	28,000 (53.9)	25,950 (61.2)	20,300 (66.4)	15,700 (69.8)	14,150 (72.4)	12,800 (74.5)	11,300 (76.2)	10,050 (77.1)
45			22,300 (31.5)	23,900 (48.1)	24,100 (56.8)	18,600 (62.8)	14,350 (67.1)	12,950 (70.1)	11,750 (72.5)	10,700 (74.4)	10,050 (75.4)
50			13,100 (15.9)	20,650 (41.6)	20,850 (52.1)	17,100 (59)	13,200 (64)	11,900 (67.8)	10,850 (70.4)	9,930 (72.6)	9,470 (73.6)
55				17,900 (32.7)	18,000 (47)	15,800 (55)	12,150 (60.7)	11,000 (65)	10,000 (68.3)	9,200 (70.7)	8,780 (71.8)
60				12,000 (21)	15,550 (41.3)	14,650 (50.7)	11,250 (57.2)	10,150 (62.1)	9,300 (65.9)	8,540 (68.8)	8,160 (70)
65					13,500 (33.6)	13,600 (46.2)	10,450 (53.6)	9,460 (59.1)	8,640 (63.3)	7,940 (66.7)	7,590 (68.1)
70					11,150 (24.1)	11,900 (41.2)	9,760 (49.7)	8,800 (55.9)	8,030 (60.6)	7,380 (64.3)	7,070 (66)
75					5,400 (8.3)	10,550 (34.3)	9,120 (45.6)	8,210 (52.6)	7,460 (57.7)	6,840 (61.8)	6,550 (63.7)
80						9,350 (26.3)	8,530 (41.1)	7,580 (49.1)	6,840 (54.8)	6,260 (59.3)	5,980 (61.3)
85						5,950 (15.3)	7,900 (35)	6,990 (45.3)	6,290 (51.7)	5,720 (56.7)	5,460 (58.8)
90							7,340 (27.9)	6,450 (41.2)	5,780 (48.5)	5,240 (53.9)	4,990 (56.3)
95							5,620 (19)	5,960 (35.6)	5,310 (45)	4,790 (51.1)	4,550 (53.7)
100								5,520 (29.3)	4,880 (41.2)	4,380 (48)	4,150 (50.9)
105								5,110 (21.7)	4,490 (36.1)	4,000 (44.8)	3,730 (48)
110								2,440 (10.7)	4,120 (30.3)	3,640 (41.3)	3,340 (45)
115									3,780 (23.7)	3,320 (36.5)	2,980 (41.6)
120									2,590 (15.1)	3,010 (31.3)	2,650 (37)
125										2,730 (25.4)	2,350 (32.1)
130										2,460 (18.1)	2,070 (26.5)
135											1,800 (19.9)
140											720 (10.5)

NOTE: ( ) Boom angles are in degrees.

THIS CHART IS ONLY A GUIDE AND SHOULD NOT BE USED TO OPERATE THE CRANE.
The individual crane's load chart, operating instructions and other instructional plates must be read and understood prior to operating the crane.

NBT60XL/NTC60XL

11 m – 46 m (36 ft – 151 ft) | 11 m (36 ft) | 7257 kg (16000 lb) | 100% | 360°

Pounds

Radius in Feet	Main Boom Length in Feet											
	0° OFFSET ANGLE				15° OFFSET ANGLE				30° OFFSET ANGLE			
	120	132	144	151	120	132	144	151	120	132	144	151
30	7,720 (80)	--	--	--	--	--	--	--	--	--	--	--
35	7,720 (78.4)	6,370 (79.6)	--	--	--	--	--	--	--	--	--	--
40	7,720 (76.8)	6,370 (78.1)	5,200 (79.2)	4,420 (79.8)	7,000 (79.5)	--	--	--	--	--	--	--
45	7,720 (75.2)	6,370 (76.6)	5,200 (77.8)	4,420 (78.5)	6,730 (77.8)	--	--	--	--	--	--	--
50	7,670 (73.5)	6,370 (75.1)	5,200 (76.4)	4,420 (77.1)	6,540 (76.2)	6,400 (77.6)	--	--	5,660 (78.6)	--	--	--
55	7,260 (71.8)	6,370 (73.6)	5,200 (75)	4,420 (75.8)	6,360 (74.5)	6,150 (76.1)	5,590 (77.4)	4,940 (78)	5,530 (76.9)	5,440 (78.2)	--	--
60	6,880 (70.1)	6,370 (72)	5,200 (73.6)	4,420 (74.4)	6,100 (72.8)	5,880 (74.5)	5,590 (75.9)	4,940 (76.7)	5,420 (75.1)	5,350 (76.6)	5,190 (78)	--
65	6,520 (68.4)	6,260 (70.5)	5,200 (72.2)	4,420 (73.1)	5,810 (71)	5,620 (72.9)	5,370 (74.5)	4,940 (75.3)	5,320 (73.3)	5,190 (75)	5,000 (76.5)	4,870 (77.2)
70	6,180 (66.6)	5,960 (68.8)	5,200 (70.7)	4,420 (71.7)	5,550 (69.2)	5,380 (71.3)	5,160 (73)	4,940 (73.9)	5,140 (71.5)	4,990 (73.4)	4,810 (75)	4,700 (75.8)
75	5,870 (64.4)	5,690 (67.2)	5,200 (69.2)	4,420 (70.3)	5,300 (67.4)	5,150 (69.6)	4,960 (71.6)	4,840 (72.5)	4,940 (69.6)	4,800 (71.7)	4,640 (73.5)	4,540 (74.3)
80	5,580 (62.1)	5,400 (65.2)	4,990 (67.7)	4,420 (68.8)	5,070 (65.3)	4,930 (68)	4,760 (70)	4,660 (71.1)	4,760 (67.7)	4,630 (70)	4,470 (72)	4,380 (72.9)
85	5,310 (59.8)	5,060 (63.2)	4,680 (65.9)	4,420 (67.3)	4,860 (63)	4,730 (66.1)	4,580 (68.5)	4,480 (69.6)	4,580 (65.5)	4,460 (68.2)	4,320 (70.4)	4,230 (71.4)
90	5,070 (57.4)	4,750 (61)	4,380 (64)	4,200 (65.5)	4,660 (60.6)	4,550 (64)	4,400 (66.9)	4,250 (68.1)	4,420 (63.1)	4,310 (66.4)	4,170 (68.8)	4,090 (69.9)
95	4,830 (54.9)	4,450 (58.8)	4,100 (62.1)	3,930 (63.7)	4,480 (58.1)	4,370 (61.8)	4,150 (64.9)	3,980 (66.4)	4,270 (60.6)	4,160 (64.1)	4,030 (67.1)	3,960 (68.3)
100	4,540 (52.4)	4,170 (56.6)	3,840 (60)	3,670 (61.8)	4,310 (55.6)	4,200 (59.5)	3,890 (62.9)	3,730 (64.5)	4,130 (57.9)	4,020 (61.8)	3,900 (65)	3,820 (66.6)
105	4,270 (49.7)	3,920 (54.3)	3,600 (58)	3,430 (59.8)	4,150 (52.9)	3,950 (57.2)	3,650 (60.8)	3,500 (62.5)	4,010 (55.2)	3,900 (59.4)	3,730 (62.9)	3,580 (64.6)
110	4,020 (46.9)	3,680 (51.9)	3,370 (55.9)	3,070 (57.8)	4,010 (50.1)	3,710 (54.8)	3,420 (58.7)	3,270 (60.5)	3,890 (52.2)	3,780 (56.9)	3,500 (60.7)	3,360 (62.5)
115	3,790 (44)	3,450 (49.4)	3,150 (53.7)	2,730 (55.7)	3,810 (47.1)	3,490 (52.3)	3,200 (56.5)	2,940 (58.4)	3,780 (49.2)	3,550 (54.3)	3,280 (58.5)	3,100 (60.4)
120	3,480 (40.8)	3,240 (46.7)	2,900 (51.4)	2,420 (53.6)	3,600 (43.9)	3,280 (49.7)	3,000 (54.2)	2,610 (56.3)	3,650 (45.8)	3,340 (51.6)	3,070 (56.1)	2,760 (58.2)
125	3,080 (36.3)	2,950 (44)	2,640 (49.1)	2,130 (51.4)	3,280 (40.3)	3,080 (46.9)	2,810 (51.8)	2,320 (54.1)	3,420 (42.2)	3,140 (48.7)	2,880 (53.7)	2,450 (56)
130	2,710 (31.5)	2,580 (40.9)	2,400 (46.6)	1,870 (49.2)	2,890 (35.2)	2,800 (43.9)	2,560 (49.3)	2,040 (51.8)	2,990 (37)	2,950 (45.6)	2,690 (51.1)	2,170 (53.6)
135	2,390 (26.2)	2,250 (36.8)	2,130 (44)	1,630 (46.8)	2,520 (29.6)	2,440 (40.5)	2,320 (46.7)	1,780 (49.4)	--	2,560 (42.3)	2,440 (48.4)	1,900 (51.1)
140	2,090 (20)	1,940 (32.3)	1,820 (41.2)	1,400 (44.3)	2,190 (23)	2,110 (35.8)	2,020 (43.9)	1,550 (46.9)	--	2,200 (37.4)	2,160 (45.5)	1,640 (48.5)
145	1,320 (11.7)	1,660 (27.4)	1,540 (37.2)	1,190 (41.6)	--	1,800 (30.6)	1,720 (40.7)	1,320 (44.2)	--	--	1,830 (42.4)	1,410 (45.7)
150	--	1,410 (21.8)	1,270 (33)	990 (37.8)	--	1,510 (24.7)	1,430 (36.3)	1,110 (41.1)	--	--	1,520 (37.8)	1,180 (42.7)
155	--	1,180 (14.9)	1,030 (28.5)	810 (33.7)	--	1,250 (17.3)	1,160 (31.5)	910 (36.9)	--	--	--	970 (38.4)
160	--	--	810 (23.4)	640 (29.3)	--	--	920 (26.1)	730 (32.3)	--	--	--	--
165	--	--	610 (17.3)	--	--	--	690 (19.7)	550 (27.2)	--	--	--	--

NOTE: ( ) Boom angles are in degrees.

THIS CHART IS ONLY A GUIDE AND SHOULD NOT BE USED TO OPERATE THE CRANE.
The individual crane's load chart, operating instructions and other instructional plates must be read and understood prior to operating the crane.

Load charts

NBT60XL/NTC60XL

11 m – 46 m (36 ft – 151 ft) | 11 m (36 ft) | 7257 kg (16000 lb) | 100% | Over rear

Pounds

Radius in Feet	Main Boom Length in Feet											
	0° OFFSET ANGLE				15° OFFSET ANGLE				30° OFFSET ANGLE			
	120	132	144	151	120	132	144	151	120	132	144	151
30	7,720 (80)	--	--	--	--	--	--	--	--	--	--	--
35	7,720 (78.4)"	6,370 (79.6)	--	--	--	--	--	--	--	--	--	--
40	7,720 (76.8)	6,370 (78.1)	5,200 (79.2)	4,420 (79.8)	7,000 (79.5)	--	--	--	--	--	--	--
45	7,720 (75.2)	6,370 (76.6)	5,200 (77.8)	4,420 (78.5)	6,730 (77.8)	--	--	--	--	--	--	--
50	7,670 (73.5)	6,370 (75.1)	5,200 (76.4)	4,420 (77.1)	6,540 (76.2)	6,400 (77.6)	--	--	5,660 (78.6)	--	--	--
55	7,260 (71.8)	6,370 (73.6)	5,200 (75)	4,420 (75.8)	6,360 (74.5)	6,150 (76.1)	5,590 (77.4)	4,940 (78)	5,530 (76.9)	5,440 (78.2)	--	--
60	6,880 (70.1)	6,370 (72)	5,200 (73.6)	4,420 (74.4)	6,100 (72.8)	5,880 (74.5)	5,590 (75.9)	4,940 (76.7)	5,420 (75.1)	5,350 (76.6)	5,190 (78)	--
65	6,520 (68.4)	6,260 (70.5)	5,200 (72.2)	4,420 (73.1)	5,810 (71)	5,620 (72.9)	5,370 (74.5)	4,940 (75.3)	5,320 (73.3)	5,190 (75)	5,000 (76.5)	4,870 (77.2)
70	6,180 (66.6)	5,960 (68.8)	5,200 (70.7)	4,420 (71.7)	5,550 (69.2)	5,380 (71.3)	5,160 (73)	4,940 (73.9)	5,140 (71.5)	4,990 (73.4)	4,810 (75)	4,700 (75.8)
75	5,870 (64.4)	5,690 (67.2)	5,200 (69.2)	4,420 (70.3)	5,300 (67.4)	5,150 (69.6)	4,960 (71.6)	4,840 (72.5)	4,940 (69.6)	4,800 (71.7)	4,640 (73.5)	4,540 (74.3)
80	5,580 (62.1)	5,400 (65.2)	4,990 (67.7)	4,420 (68.8)	5,070 (65.3)	4,930 (68)	4,760 (70)	4,660 (71.1)	4,760 (67.7)	4,630 (70)	4,470 (72)	4,380 (72.9)
85	5,310 (59.8)	5,060 (63.2)	4,680 (65.9)	4,420 (67.3)	4,860 (63)	4,730 (66.1)	4,580 (68.5)	4,480 (69.6)	4,580 (65.5)	4,460 (68.2)	4,320 (70.4)	4,230 (71.4)
90	5,070 (57.4)	4,750 (61)	4,380 (64)	4,200 (65.5)	4,660 (60.6)	4,550 (64)	4,400 (66.9)	4,250 (68.1)	4,420 (63.1)	4,310 (66.4)	4,170 (68.8)	4,090 (69.9)
95	4,830 (54.9)	4,450 (58.8)	4,100 (62.1)	3,930 (63.7)	4,480 (58.1)	4,370 (61.8)	4,150 (64.9)	3,980 (66.4)	4,270 (60.6)	4,160 (64.1)	4,030 (67.1)	3,960 (68.3)
100	4,540 (52.4)	4,170 (56.6)	3,840 (60)	3,670 (61.8)	4,310 (55.6)	4,200 (59.5)	3,890 (62.9)	3,730 (64.5)	4,130 (57.9)	4,020 (61.8)	3,900 (65)	3,820 (66.6)
105	4,270 (49.7)	3,920 (54.3)	3,600 (58)	3,430 (59.8)	4,150 (52.9)	3,950 (57.2)	3,650 (60.8)	3,500 (62.5)	4,010 (55.2)	3,900 (59.4)	3,730 (62.9)	3,580 (64.6)
110	4,020 (46.9)	3,680 (51.9)	3,370 (55.9)	3,070 (57.8)	4,010 (50.1)	3,710 (54.8)	3,420 (58.7)	3,270 (60.5)	3,890 (52.2)	3,780 (56.9)	3,500 (60.7)	3,360 (62.5)
115	3,790 (44)	3,450 (49.4)	3,150 (53.7)	2,730 (55.7)	3,810 (47.1)	3,490 (52.3)	3,200 (56.5)	2,940 (58.4)	3,780 (49.2)	3,550 (54.3)	3,280 (58.5)	3,100 (60.4)
120	3,570 (40.8)	3,240 (46.7)	2,900 (51.4)	2,420 (53.6)	3,600 (43.9)	3,280 (49.7)	3,000 (54.2)	2,610 (56.3)	3,650 (45.8)	3,340 (51.6)	3,070 (56.1)	2,760 (58.2)
125	3,370 (36.3)	3,030 (44)	2,640 (49.1)	2,130 (51.4)	3,400 (40.3)	3,080 (46.9)	2,810 (51.8)	2,320 (54.1)	3,440 (42.2)	3,140 (48.7)	2,880 (53.7)	2,450 (56)
130	3,180 (31.5)	2,780 (40.9)	2,400 (46.6)	1,870 (49.2)	3,210 (35.2)	2,900 (43.9)	2,560 (49.3)	2,040 (51.8)	3,250 (37)	2,950 (45.6)	2,690 (51.1)	2,170 (53.6)
135	2,990 (26.2)	2,550 (36.8)	2,170 (44	1,630 (46.8)	3,030 (29.6)	2,660 (40.5)	2,320 (46.7)	1,780 (49.4)	--	2,760 (42.3)	2,440 (48.4)	1,900 (51.1)
140	2,770 (20)	2,330 (32.3)	1,960 (41.2)	1,400 (44.3)	2,840 (23)	2,430 (35.8)	2,090 (43.9)	1,550 (46.9)	--	2,510 (37.4)	2,190 (45.5)	1,640 (48.5)
145	1,320 (11.7)	2,120 (27.4)	1,750 (37.2)	1,190 (41.6)	--	2,210 (30.6)	1,870 (40.7)	1,320 (44.2)	--	--	1,960 (42.4)	1,410 (45.7)
150	--	1,920 (21.8)	1,560 (33)	990 (37.8)	--	1,990 (24.7)	1,660 (36.3)	1,110 (41.1)	--	--	1,730 (37.8)	1,180 (42.7)
155	--	1,240 (14.9)	1,380 (28.5)	810 (33.7)	--	1,670 (17.3)	1,460 (31.5)	910 (36.9)	--	--	--	970 (38.4)
160	--	--	1,200 (23.4)	640 (29.3)	--	--	1,280 (26.1)	730 (32.3)	--	--	--	--
165	--	--	1,040 (17.3)	--	--	--	1,090 (19.7)	550 (27.2)	--	--	--	--

NOTE: ( ) Boom angles are in degrees.

THIS CHART IS ONLY A GUIDE AND SHOULD NOT BE USED TO OPERATE THE CRANE.
The individual crane's load chart, operating instructions and other instructional plates must be read and understood prior to operating the crane.

Superstructure

Boom

11,1 m – 46 m (36.5 ft – 151 ft) five-section boom with a maximum tip height of 49,1 m (161 ft). Includes proportional extension via multi-stage hydraulic cylinder and cable operation, four-plate, high-strength steel construction, three-sheave, quick-reeve boom nose and Easy-Glide wear pads.

Boom elevation

One (1) double-acting, hydraulic cylinder with integral holding valve and integral pressure transducers provides elevation from -8° to +80°.

Rated Capacity Limiting (RCL) and anti-two-block (ATB) systems

Graphical display capacity limiter and ATB system with audio visual warning and crane function lockout. The graphical display is a 178 mm (7 in) color and polarized screen for real-time display of boom angle, length, radius, tip height, maximum permissible load, load indication, and warning of impending overload or ATB condition. Work area definition system (WADS) provides operator definable non-lockout warning limits for crane operations, and CANbus sensors and hard-wired ATB circuit routed internally to the boom. Outrigger monitoring system (OMS) to sense the configuration of the outriggers and aid the operator in selecting an appropriate setup. Onboard setup and diagnostics for RCL sensors allow for improved service and an event recorder to protect your investment.

Control system

Fully integrated RCL and CANbus crane control system for maximum performance. Real-time diagnostics for truck chassis data such as engine regeneration, fuel level, engine coolant, oil pressure, engine rpm and battery voltage. Onboard setup and diagnostics for all sensors and control modules allows for improved service and little need for a laptop or diagnostic cables. Fault codes to quickly identify service needs, and event recorder to protect your investment.

Operator cab and controls

Cab structure: rigid galvanealed steel structure, well insulated, offering optimum operator visibility and comfort. Equipped with tilting cab feature from horizontal to +20°, tinted safety glass, fixed front window with windshield wiper and washer, sliding skylight window with windshield wiper, sliding left-side glass door, sliding right-side window for ventilation with safety grille, tilting rear window for ventilation, four-way adjustable, cushioned/heated seat and armrests with seat belt, diesel-fired warm-water heater with air ducts at operators feet, left side of cab and front dash (standard), hydraulic-powered air conditioner (standard), circulation fan, bubble level, adjustable sun visor, dome light, cup holder, fire extinguisher, load chart binder with tear-proof paper load charts and operator manual.

Armrest control functions are arranged per ASME B30.5: Two dual axis electric joystick controllers for swing, boom telescope, main hoist, auxiliary hoist (optional), boom lift, warning horn button, swing park brake switch, hoist rotation indicator, tilt cab up/down, main hoist high/low speed switch, and aux hoist high/low speed switch (optional).

Outrigger controls: front console-mounted electronic keypad allowing the operator to activate all horizontal beams and vertical jacks. Pre-selection capabilities to easily activate more than one function for ease of setup.

Rigging remote: Standard wireless rigging remote stored and charged inside the crane cab, which allows the operation of the main (and (optional aux) hoist to stow and unstow the hook blocks at the front bumper of the truck chassis for transport or operation. If the crane is equipped with an optional single front outrigger (SFO), this remote allows for raising and lowering of this vertical outrigger.

Foot controls: engine throttle (electronic), dynamic swing brake (electronic), boom telescope (electronic, if equipped with aux hoist option).

Front console controls and indicators for RCL display, outriggers, engine ignition key, emergency stop switch and RCL override keyswitch (momentary). 12VDC power outlet.

Overhead console controls and indicators for heater, A/C and fan speed, windshield wiper and washer, skylight wiper, cab-mounted work lights, crane function power, radio remote power.

Removable counterweight

Hydraulically removable counterweight system consisting of (2) vertical double-acting hydraulic cylinders equipped with holding valves to independently raise and lower the desired counterweight slabs. Controls can be activated at both the left and right sides of the turret near the counterweight for ease of activation during counterweight pin reconfiguration. When not in use, one or all of the slabs can be stowed on top of the front outrigger box. One or all of the slabs can also be removed from the crane by using the crane itself after stowing on front outrigger box first.

NBT60XL/NTC60XL:

Standard counterweight package consists of:

- (2) 1361 kg (3,000 lb) slabs
- (2) 2268 kg (5,000 lb) slabs for a total of 7257 kg (16,000 lb) of hydraulically removable counterweight

*See counterweight configurations page for allowable configurations.

Specifications

Slewing

Continuous 360° rotation using (a) low-speed, high-torque motor with a manually adjustable swing adjustment valve integrated to the hydraulic motor control manifold mounted to a planetary reduction gear. A proportional electronic brake pedal located in the operator cab allows for the dynamic application of the multi-disk swing brake circuit. A separate spring-applied, hydraulic-released brake for disabling rotation can be activated from the left-hand seat armrest. Free-swing functionality is disabled when using the optional crane radio remote control.

Hydraulic system

Efficient closed-center, load-sense hydraulics system featuring flow-sharing technology allowing for smooth multifunction operation of all crane functions. One (1) SAE-C mounted, 130cc axial piston pump for all functions and optimized system performance. Shaft input of 2200 rpm, generating 288 lpm (76 gpm) max flow at 310 bar (4500 psi) max operating pressure. 143 gal (541 L) hydraulic reservoir with SAE o-ring connections and integrated butterfly shut-off valve for easy maintenance. SAE o-ring hydraulic fittings and hoses throughout. Boom lift, boom telescope, main and aux hoist(s) and vertical outrigger jacks are all equipped with counterbalance valves for controlled movement and load holding.

Hydraulic oil cooler: standard electric fan, plate- and fin-style oil cooler mounted in the rear of the superstructure to remove heat from the hydraulic oil under heavy operating conditions.

Electrical system

Automotive-grade, fully wire-harnessed 12VDC electrical system using state-of-the-art sealed connectors and control modules. Dual-tone backup and outrigger motion alarm located at rear of machine. LED marker and triple ID lights.

Lower

Chassis mounting

Torsion-resistant, high-strength steel sub frame attached using high-strength steel mounting brackets that are welded to the sub-frame and bolted to the truck chassis using Huck® bolts to ensure a secure and maintenance-free connection. Rear bumper under ride protection standard. Fixed boom rest mounted to front outrigger box and fabricated from structural steel.

Outriggers

Out- and down-style outriggers at both the front and rear with individual control of each horizontal beam extension and vertical jack cylinder. Each outrigger jack is equipped with a 500 m (19.7 in) polymeric outrigger float standard. Horizontal beams are non-proportional and can be pinned in (4) different configurations for operation. Front outriggers are angled toward the truck cab, minimizing the need for an SFO. Ground-level control stations located at the left and right side for all vertical jacks and only the horizontal beams for each station. Operator cab features an electronic keypad mounted on the front console to control all outrigger functions.

100% span: Front = 7,09 m (23 ft 3 in)
Rear = 7,39 m (24 ft 3 in)

75% span: Front = 5,9 m (19 ft 4 in)
Rear = 6,12 m (20 ft 1 in)

Note: 75% span available ONLY with the NTC Performance Package.

50% span: Front = 4,72 m (15 ft 6 in)
Rear = 4,90 m (16 ft 1 in)

0% span: Front and Rear = 2,39 m (7 ft 10 in)

Outrigger monitoring system for horizontal beam extension is standard. Inverted cylinder rods for vertical outrigger jack cylinders for best protection of chromed rod. Optional single front outrigger (SFO) is available for heavy front axle mounting configurations.

Optional items

• NTC Performance Package (NTC60XL)

> Four-position outriggers
> Wireless windspeed sensor package
> NTC60XL model designation decals and materials

• Operator aids

> Six-function wireless radio remote control of approximately 75 m (250 ft) (NB6R)

• Telescopic offsettable jib

> 7,9 m – 13,7 m (26 ft – 45 ft) telescoping boom extension (side fold for stowing), includes 5,8 m (19 ft) manual pull-out section
> Max tip height of 61,9 m (203 ft)
> Offsets of 0° and 30°
> RCL calibration for future jib option

• Lattice fixed offsettable jib

> 11 m (36 ft) fixed boom extension (side fold for stowing)
> Max tip height of 59,1 m (194 ft)
> Offsets of 0°, 15° and 30°
> RCL calibration for future jib option

• Auxiliary hoist

> A second turret-mounted hoist located to the rear of the standard main hoist
> Standard rotation-resistant wire rope and round, top-swivel downhaul weight

• Personnel handling platforms

> (2) person steel, non-insulated platform options
> Rapid Attach Platform system available in both the rotating (R-RAP2) and yoke-style (Y-RAP2) options
> Capacities up to 544,3 kg (1200 lb) on main boom and 226,8 kg (500 lb) on jib
> Platform test weight sets available for each
> Compliant to ASME B30.23 requirements

• Wireless windspeed sensor

> Real-time feedback of current speed
> Display on in-dash RCL display and optional wireless radio remote

• Camera package

> Camera package offering visibility of the rear quadrant of the machine, including counterweight area and view of the hoist(s)
> Video camera at hoist location
> Rearview video camera on rear of turntable providing a 170-degree view angle enabling operator to see outriggers fully deployed and then some for enhanced jobsite visibility

• Hook blocks

> Single-sheave, 18,1 t (20 USt) quick-reeve hook block for 2-3 part reeving [186 kg (410 lb)]
> Triple-sheave, 36,3 t (40 USt) quick-reeve hook block for 4-7 part reeving including auxiliary sheave case assembly (272 kg [600 lb])
> Five-sheave, 54,4 t (60 USt) quick-reeve hook block for 8-10 part reeving including auxiliary sheave case assembly (504 kg [1111 lb])

• Single front outrigger

> 63,5 m (25 in) vertical stroke
> Available for certain mounting configurations

• Aluminum outrigger floats

> 610 mm (24 in) aluminum floats in lieu of the standard 500 mm (19.7 in) polymeric floats

Specifications

Main and (optional) auxiliary hoist(s)

Two-speed displacement, bent-axis piston motor driving a planetary gearset and a grooved drum with cable tensioner/follower, drum rotation indicator, and last layer and minimum wrap indicators.

Parts of Line	1 part line	2 part line	3 part line	4 part line	5 part line	6 part line	7 part line	8 part line	9 part line	10 part line	11 part line
Max boom length (ft) at max elevations with stated rigging and load block and ground level	196 (includes 45 ft ext.)	144	108	84	72	60	48	36.8	36.8	36.8	36.8
Low speed lift (lb)	11,280	22,500	33,750	45,000	56,250	67,500	78,750	90,000	100,000	111,250	120,000
High speed lift (lb)	5000	10,000	15,000	20,000	25,000	30,000	35,000	40,000	45,000	50,000	55,000

Line Pulls and Reeving Information			
Hoists	**Cable specs.**	**Permissible line pulls**	**Nominal cable length**
Main and Auxiliary	16 mm (5/8 in) Dyform 34 LR Rotation Resistant (non-rotating) Min. Breaking Strength 56,420 lb	11,280 lb*	152 m (498 ft)
Main and Auxiliary	18 mm Synthetic K-100™ Hoist Rope (ISO) Min. Breaking Strength 63,700 lb	12,740 lb*	152 m (498 ft)

The approximate weight of 5/8 in wire rope is 1.0 lb/ft.
The approximate weight of 18 mm synthetic rope is 0.16 lb/ft.
*With certain boom and hoist tackle combinations, the allowable line pull may be limited by hoist performance. Refer to Hoist Performance table for lift planning to ensure adequate hoist performance on drum rope layer required.

Hoist Performance				
Wire rope layer	**Hoist line pulls**		**Drum capacity (ft)**	
	Two-speed hoist			
	Low	**High**	**Layer**	**Total**
	Available lb	**Available lb**		
1	17,250	7040	78	78
2	15,450	6310	87	165
3	14,000	5720	96	261
4	12,790	5220	105	366
5	11,780	4810	114	480

**Refer to Line Pulls and Reeving Information table for max. lifting capacity of wire rope.*

Synthetic rope layer height may vary and may reduce available line pull per layer.

Weight Reductions for Load-Handling Devices	
Auxiliary boom nose (single-sheave)	35,5 kg (78.1 lb)
Auxiliary boom nose (double-sheave)	44,3 kg (97.7 lb)
Hook blocks and headache balls	
60 USt, 5-sheave	504 kg (1111 lb)+
40 USt, 3-sheave	272,2 kg (600 lb)+
20 USt, 1-sheave	204 kg (450 lb)+
7 USt overhaul ball	163,7 kg (250 lb)+

+ Refer to rating plate for actual weight

When lifting over boom extension, deduct total weight of all load handling devices reeved over main boom nose directly from boom extension capacity.

NOTE: All load handling devices and boom attachments are considered part of the load and suitable allowances MUST BE MADE for their combined weights. Weights are for Manitowoc furnished equipment.

Symbols glossary

Boom

Chassis

Extension

Outriggers

Boom elevation

Counterweight

Extension

Radius

Boom extension

Crane control system

Hoist

Rotation

Cab

Electrical system

Hydraulic system

Manitowoc Cranes

Regional headquarters

Americas

Milwaukee, Wisconsin, USA
Tel: +1 414 760 4600

Shady Grove, Pennsylvania, USA
Tel: +1 717 597 8121

Europe and Africa

Dardilly, France - TOWERS
Tel: +33 (0)4 72 18 20 20

Wilhelmshaven, Germany - MOBILE
Tel: +49 (0) 4421 294 0

APAC

Shanghai, China
Tel: +86 21 6457 0066

Singapore
Tel: +65 6264 1188

Middle East and India

Dubai, UAE
Tel: +971 4 8862677

Manitowoc Crane Care™

Manitowoc Finance™

This document is non-contractual. Constant improvement and engineering progress make it necessary that we reserve the right to make specification, equipment and price changes without notice. Illustrations shown may include optional equipment and accessories and may not include all standard equipment.

©2020 The Manitowoc Company, Inc.

Form No. NBT60XL PG
Part No. 20-???/1.5M/0920

www.manitowoc.com